DRIVE TRAIN, CLUTCH COVER AND DUCTING - Z26NEY99A4/B4/A6/B6 (C760071)

2026 RZR - RZR XP S 1000 ULTIMATE (R01) - Z26NEY99A4/B4/A6/B6

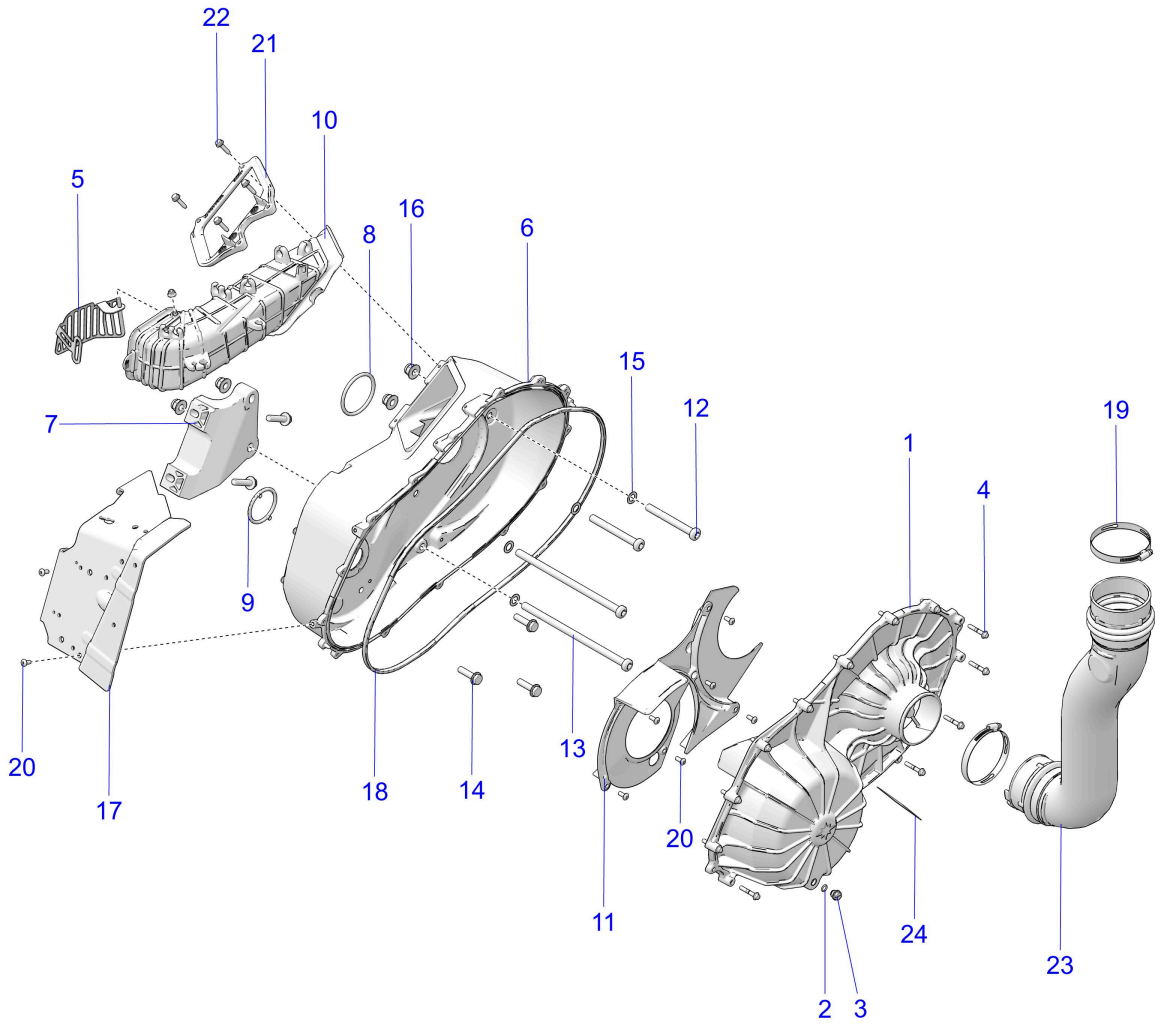

© 2025 Polaris Industries Inc. C760071

Reference #	*Part#*	*Description*	*Quantity*
1	2639856	ASM-COVER,CLUTCH,OUTER [INCLUDES 2-4]	1
2	5410542	O RING-.364X.504X.07	1
3	5434264	PLUG-DRAIN,CLUTCH COVER	1
4	7521195	SCR-HXFL-M6X2.0X38 SPC	14
5	1028036	BRKT-SCREEN,BELT	1
6	5144719	COVER-CLUTCH,INNER,MACH	1
7	5144809	BRKT-TRANSJOINT,MAG,MACH	1
8	5415647	O-RING-0.489X0.629X0.070,EPDM	1
9	5417662	O-RING-2.25X2.625X.21,NBR,BARB	1
10	5418437	DUCT-CLUTCH,OUTLET	1

11	5457973	BAFFLE-INNER COVER	1
12	7520945	SCR-TXBH-M12X1.75X110 8.8 SPC	2
13	7520946	SCR-TXBH-M12X1.75X245 8.8 SPC	2
14	7521294	SCR-HHSEMS-M10X1.5X40 10.9 SPC	3
15	7555919	WASHER-.510X.840X.031 Y	4
16	7547441	NUT-HXFL M12X1.75 8 ZOD NYL	4
17	5272000	BRKT-GUARD,CLUTCH COVER	1
18	5526344	SEAL-CLTCH CVR,SILICONE FOAM	1
19	7081969	CLAMP-HOSE SLOTTED,92-100 DIA	2
20	7518656	SCR-TXPH-M6X1.0X15 GR5 ZOD NYL	11
21	5634404	MOUNT-OUTLET DUCT	1
22	7519342	SCR-TFHFL-M6X1.0X25,ZOD	4
23	1244605	ASM-DUCT,CVT,INLET	1
24	7177469	DECAL-BELT,WARNING/CHECK	1

Copyright 1996-2026 Polaris Industries U.S.A All rights reserved.